Pyrosales
Total Sensor Solutions

Conax Technologies has the in-house capabilities to custom engineer a compression seal fitting solution to meet the exact requirements of your application. Our resources include an integrated product development facility dedicated to expanding pressure and vacuum sealing technology.

Following are a variety of custom engineered solutions that Conax Technologies has produced. These examples are intended to demonstrate our ability to design and manufacture a pressure and vacuum sealing solution for virtually any application in any industry.

Hazardous Location (HL) Gland

Conax Technologies' HL Gland is designed for sealing conduit wires in a wide variety of hazardous environments.

Patent No. 7,288,719

The HL Gland is CSA® certified in the U.S. and Canada for use in hazardous locations defined by the NEC® as Class I, Div.1 and 2, Groups B, C, and D; Class II, Div. 1 and 2, Groups E, F, and G; and Class III.

The HL Gland is superior to Chico® and other similar conduit sealing compound fittings commonly used in hazardous environments.

With a mechanically-sealed Conax HL Gland, you will not have to be concerned about:

- cracks in compound sealants or incorrectly installed compound sealant that allow gases or liquids to leak in the conduit system,
- migration of explosive gases through stranded conductors due to a pressure differential in the conduit system.

Features

- CSA® certified in the U.S. and Canada
- Pressure rated to 500 psig
- Suitable for gas or liquid
- Features Grafoil® sealant
- Teflon sleeves are used to protect wires from damage
- Two body styles – small (1/2" NPT) and large (3/4" NPT)
- 303 SST components
- Wire, solid, 14, 16 or 18 AWG supplied by customer or Conax
- Minimum 18" leads on both ends
- Wires can be easily assembled in the field
- Temperature range from -4°F to 130° F (-20°C to + 55°C)

NEC® is a registered trademark of National Electrical Code.
CSA® is a registered trademark of Canadian Standards Association.
Chico® is a registered trademark of Cooper Crouse-Hinds.

Typical HL Gland Installation

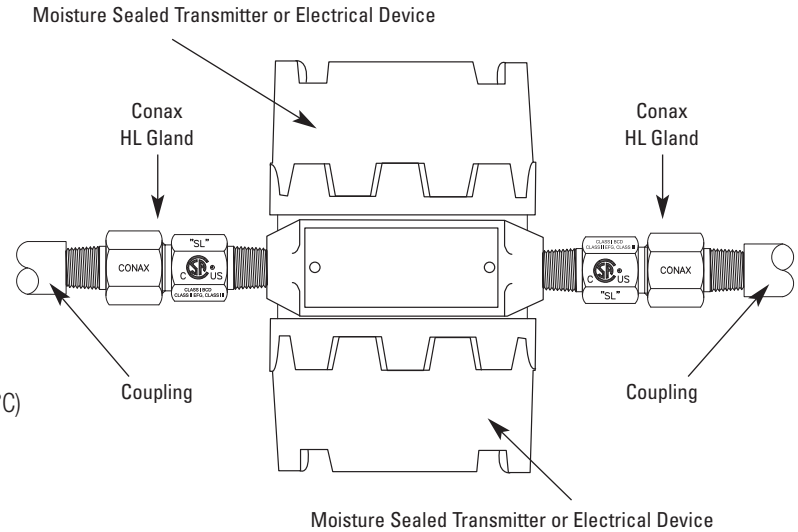

Process Analyzer Sample Probe Assembly (SPA) with Conax Packing Gland (PG) Compression Seal Fitting

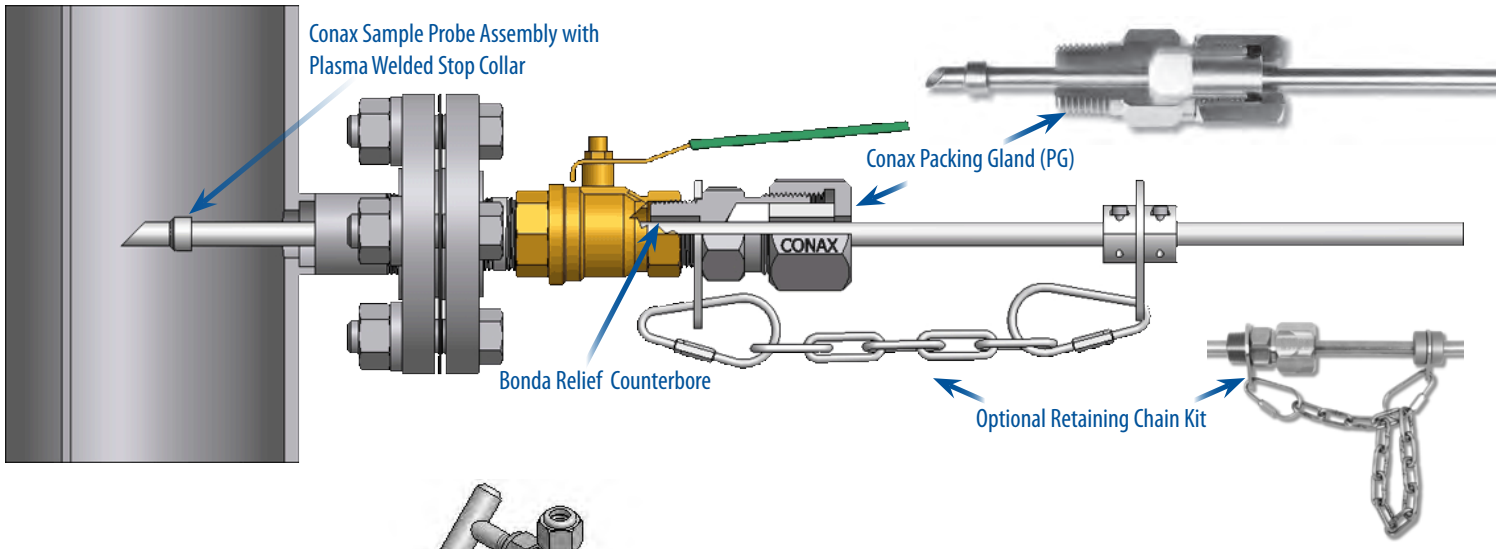

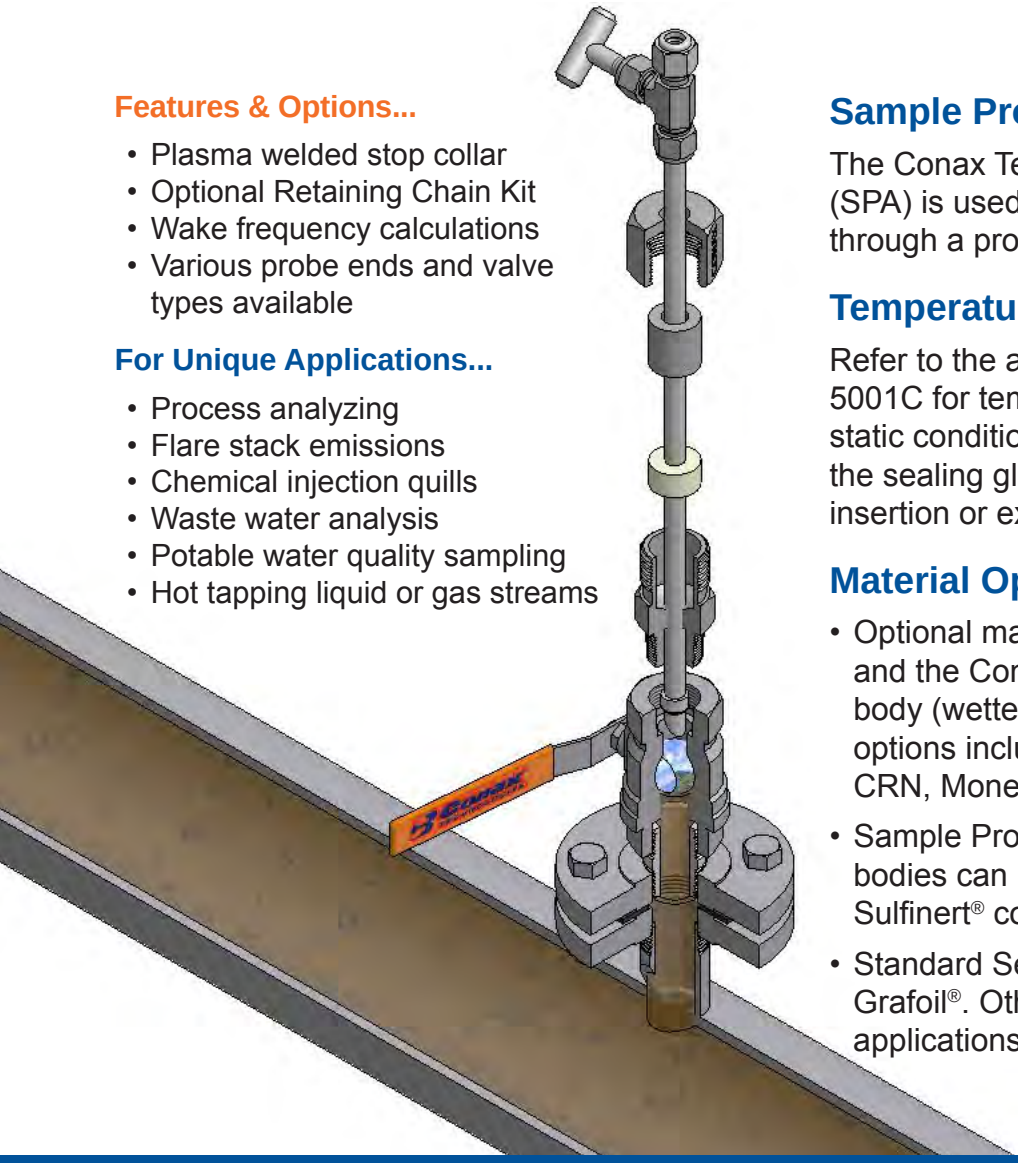

Features & Options...

- Plasma welded stop collar
- Optional Retaining Chain Kit
- Wake frequency calculations
- Various probe ends and valve types available

For Unique Applications...

- Process analyzing
- Flare stack emissions
- Chemical injection quills
- Waste water analysis
- Potable water quality sampling
- Hot tapping liquid or gas streams

Sample Probe Assembly

The Conax Technologies' Sample Probe Assembly (SPA) is used to hot-tap a probe into a process through a process isolation valve.

Temperature and Pressure Ratings

Refer to the appropriate sections of Conax Catalog 5001C for temperature and pressure ratings for static conditions. Pressure ratings are reduced when the sealing gland cap is loosened to allow for the insertion or extraction of the Sample Probe.

Material Options

- Optional materials for the Sample Probe Assembly and the Conax Technologies' Packing Gland (PG) body (wetted components) are available. Available options include 316L SST, 316 NACE SST, 316L CRN, Monel 405, Hastelloy C276 and Inconel 600.
- Sample Probe Assemblies and/or PG Gland bodies can be supplied with a Silcosteel®-CR or Sulfinert® coating.
- Standard Sealants are Teflon®, PEEK™, and Grafoil®. Other sealants are available for special applications.

Tel: **1.716.684.4500** • USA Toll Free: **1.800.223.2389** • Email: **SPA@conaxtechnologies.com** • Website: **www.conaxtechnologies.com**

How to Configure the Model Number of an SPA Assembly

Standard Conax Packing Gland (PG) Compression Seal Fitting model numbers and configurations apply. Compression seal fittings are supplied loose unless otherwise indicated.
Example model number: SPA/PG5-500-A-T/500X120W(S304)-45-1-36

Product Name	Compression Seal Fitting Used* if none indicate 'X'	Tube OD	Tube Wall	Tube Material (S304, S316, M405, HC276, I600)	"A" Tube End Angle (90°, 60°, 45°or 30°)	"L" Overall Tube Length (inches)
SPA	PG5-500-A-T	500	120W	(S304)	45	36

***See below and Page 18 of the Conax Compression Seal Fitting Catalog 5001C for more information**

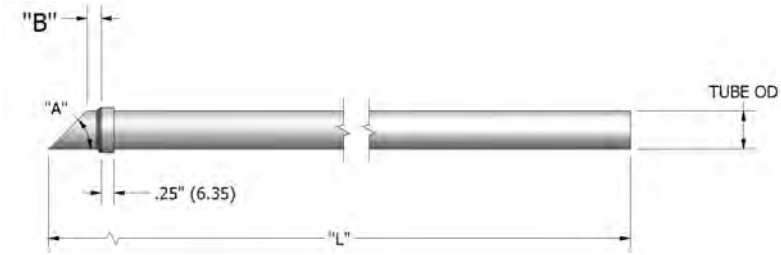

Standard Tube Sizes

OD (mm)	WALL (mm)		ID (mm)		MATERIAL
.250" (6.35)	.025"	(.64)	.200"	(5.08)	S304
	.035"	(.89)	.180"	(4.57)	S304
	.025"	(.64)	.200"	(5.08)	S316
	.035"	(.89)	.180"	(4.57)	S316
	.035"	(.89)	.180"	(4.57)	MONEL 400
	.035"	(.89)	.180"	(4.57)	HAST C276
.375" (9.53)	.040"	(1.02)	.295"	(7.49)	S304
	.065"	(1.65)	.245"	(6.22)	S304
	.040"	(1.02)	.295"	(7.49)	S316
	.058"	(1.47)	.259"	(6.58)	S316
	.065"	(1.65)	.245"	(6.22)	MONEL 400
	.035"	(.89)	.305"	(7.75)	HAST C276
	.065"	(1.65)	.245"	(6.22)	HAST C276

OD (mm)	WALL (mm)		ID (mm)		MATERIAL
.500" (12.70)	.035"	(.89)	.430"	(10.92)	S304
	.049"	(1.25)	.402"	(10.21)	S304
	.065"	(1.65)	.375"	(9.53)	S304
	.120"	(3.05)	.260"	(6.60)	S304
	.049"	(1.25)	.402"	(10.21)	S316
	.065"	(1.65)	.370"	(9.40)	MONEL 400
	.049"	(1.25)	.402"	(10.21)	HAST C276
.625" (15.88)	.065"	(1.65)	.495"	(12.53)	S304 S316
.750" (19.05)	.095"	(2.41)	.560"	(14.22)	S316
	.065"	(1.65)	.620"	(15.75)	MONEL 400
1.000" (25.40)	.120"	(3.05)	.760"	(19.30)	S316

Tubing is seamless or welded and annealed.

Conax PG Compression Seal Fittings

		SAMPLE PROBE DIA. / TUBING (mm)						SAMPLE PROBE DIA. / PIPE (mm)							
Model	NPT Size	0.250 (6.35)	0.375 (9.53)	0.500 (12.70)	0.625 (15.88)	0.750 (19.05)	1.000 (25.40)	1/8" .405" OD (10.29)	1/4" .54" OD (13.72)	3/8" .675" OD (17.15)	1/2" .84" OD (21.34)	3/4" 1.05" OD (26.67)	1" 1.315" OD (33.40)	1.25" 1.66" OD (42.16)	1.50" 1.90" OD (48.25)
PG2	1/4"	X													
PG4	1/2"	X	X					X							
PG5(PTM4)		X	X	X				X	X						
PG5	3/4"	X	X	X	X	X		X	X	X					
PG5(PTM6)	1"	X	X	X	X	X		X	X	X					
PG6						X	X				X				
PG7	1-1/4"										X	X	X		
PG8	1-1/2"												X		
PG9	2"													X	X

Other sizes and materials available on request. All Conax PG glands are available with an optional welded or threaded ASME/ANSI Raised Face Flange mount.

To Request a quote, please email SPA@conaxtechnologies.com or call 1.800.223.2389 or see page four to download the SPA quote request form.

Optional Retaining Chain Kit

The Conax Retaining Chain Kit is constructed from 300 series SST and is specifically designed to function with the Conax Process Analyzer Sample Probe Assembly (SPA) utilizing a Conax Packing (PG) Compression Seal Fitting.

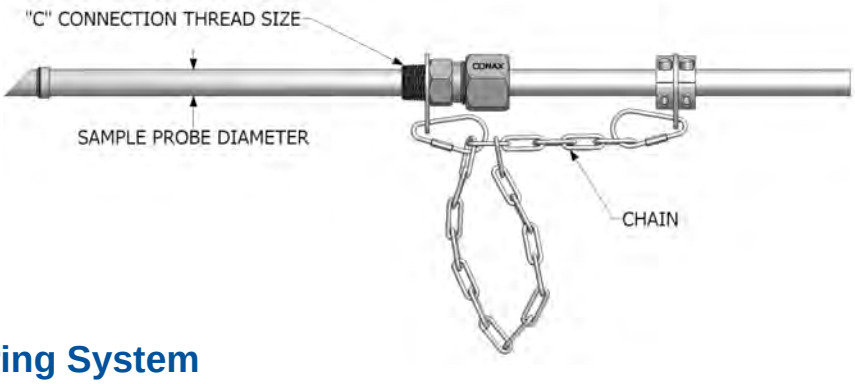

Catalog Numbering System

18	0005			
Drawing Prefix		*"C" Connection Thread Size (2 decimal places NPT)*	*Sample Probe Diameter*	*Chain Length (in whole inches)*

- 025 = .25 NPT
- 038 = .38 NPT
- 050 = .50 NPT
- 075 = .75 NPT
- 100 = 1.00 NPT

- 250 = .250" (6.35 mm)
- 375 = .375" (9.53 mm)
- 500 = .500" (12.70 mm)
- 625 = .625" (15.88 mm)
- 750 = .750" (19.05 mm)
- 1000 = 1.000" (25.40 mm)

Drawing Prefix — "C" Connection Thread Size — Sample Probe Diameter — Chain Length

Example: 18–0005–025–250–6

Installation Instructions for the Conax Retaining Chain Kit

To Install Shaft Collars:

1. Loosen collar screws
2. Place collars and back retaining washer over probe as shown
3. Tighten collar screws.
   - For 1/4" probe tighten - 8 in-lbs recommended (6.35 mm probe tighten - .90 Nm)
   - For 3/8" probe tighten - 15 in-lbs recommended (9.52 mm probe tighten - 1.70 Nm)
   - For 1/2" probe tighten - 28 in-lbs recommended (12.7 mm probe tighten - 3.16 Nm)
   - For 5/8" probe tighten (45 in-lbs recommended (15.875 mm probe tighten - 5.08 Nm)

To Adjust Safety Chain

1. Unscrew threaded connector link at process side of probe.
2. Take up all extra links and loop over the threaded connector.
3. Screw threaded connector back together and wrench tighten. 5 in-lbs recommended (.56 Nm)

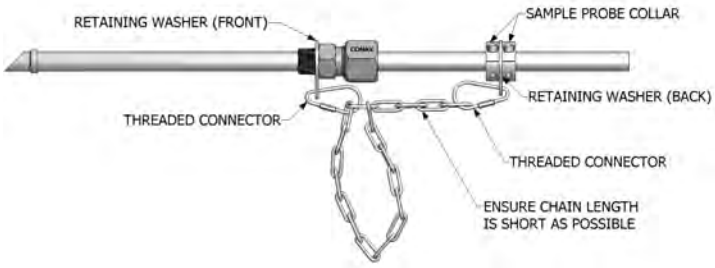

Conax TECHNOLOGIES

User Cautions

Sample Probe Assembly

- The end user must take the necessary safety precautions when loosening the cap of the Conax sealing gland when inserting or extracting the Sample Probe into pressurized environments.
- The end user is responsible to control any leakage of process that may occur during insertion or extraction of the Sample Probe.
- The end user is responsible for determining the appropriate Sample Probe material, diameter and wall thickness for the process environment and flow rates.
- Conax Technologies is not responsible for the operation of the Conax Packing Gland (PG) assembly once the cap is loosened to allow for the insertion or extraction of the Sample Probe.
- Typically, when properly installed, the angled Sample Probe tip should have the long side upstream. This reduces the particulates entering the Sample Probe and into the process analyzer filter.
- The Sample Probe immersion length should be designed to obtain a process sample close to the center third of the pipe.
- It is suggested that the end user mark the Sample Probe end with an indelible ink marker relative to the angled end for proper orientation into the process.

Retaining Chain Kit

- Retaining chain assembly is not intended to assist or control the insertion/extraction of the sample probe. The operator is responsible for restraint of the sample probe at all times.
- Chain must be kept as short as possible to function properly. Some minor slack in the chain will be present when sample probe is inserted. The retaining chain kit is not intended for impact loads. If it is subject to an impact load, all parts must be inspected/replaced as required.
- Periodically inspect restraint system. Re-torque probe collar and threaded connector. Replace parts as necessary.
- Maximum design pressure for the retaining chain kit is 500 psig. (≤ .500" (12.70mm) Sample Probe diameter.)
- Prior to installing the SPA gland into the process valve port, install the front retaining washer over the PG gland pipe thread.

Catalog 5001C, Complete Guide to Compression Seal Fittings

Please visit our website to download literature, request a quote or even watch a video for our Sample Probe Assembly.

You can also find information on other compression seal fittings, temperature sensors and mineral insulated cable products.

www.conaxtechnologies.com

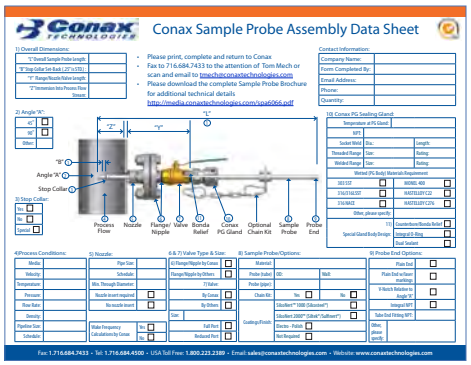

Request a quote using the Sample Probe Quote Request Form - Bulletin 6066DS

www.conaxtechnologies.com

Watch our Sample Probe Animation!

2300 Walden Avenue
Buffalo, New York 14225, USA
Toll free in the USA at 1-800-223-2389
Fax: 716-684-7433 • Phone: 716-684-4500
E-mail: SPA@conaxtechnologies.com
Website: www.conaxtechnologies.com